Low Noise Battery PSU

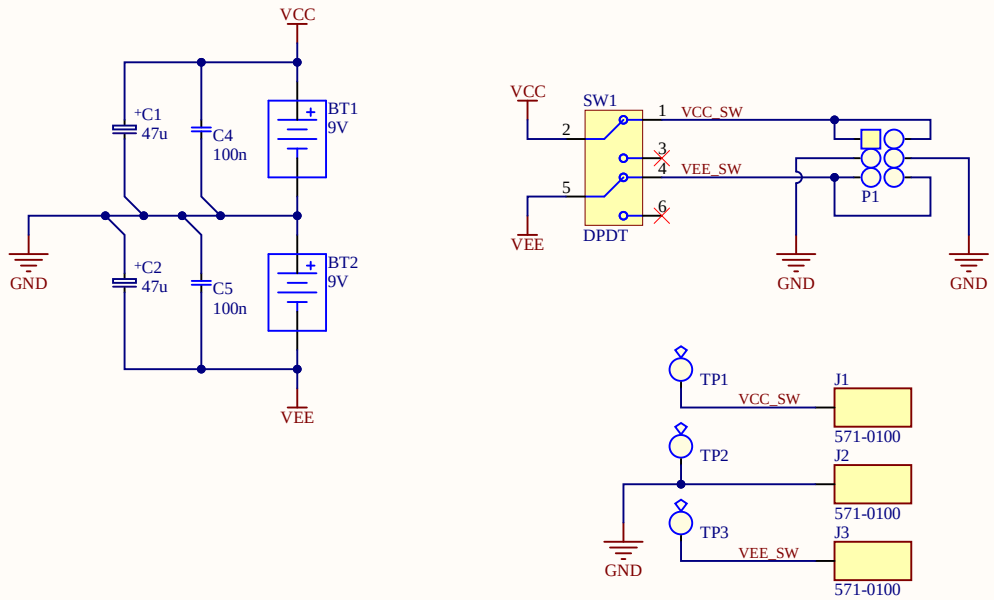

TITLE: Low Noise PSU	
DOCUMENT: Low noise PSU.SchDoc	
REV: 0.1	DATE: 2026-03-22
noxet	